FIRST ANGLE PROJECTION

(ALL DIMENSIOMS ARE IN mm)

DRG. NO. 3WEEOT01149

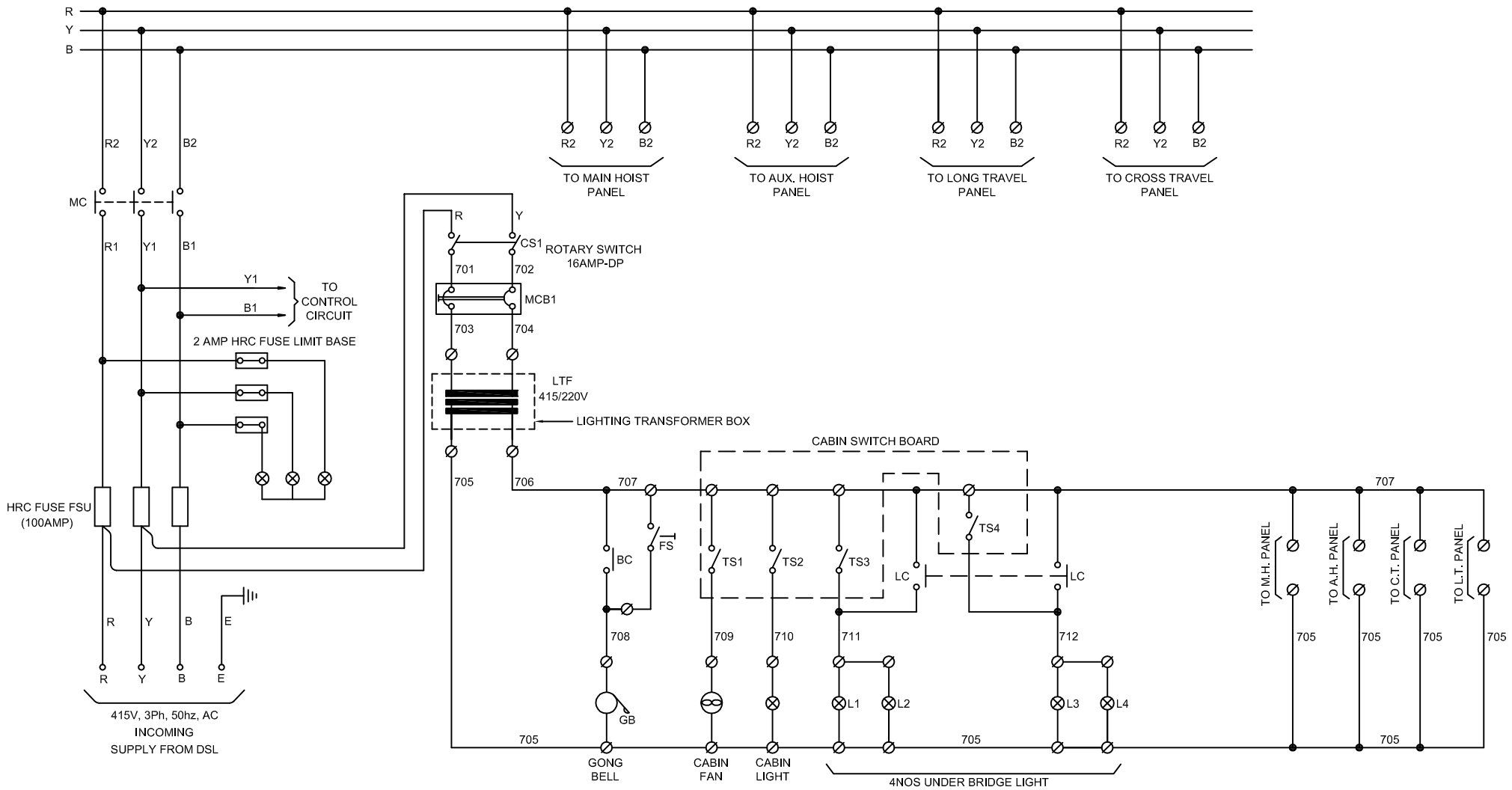

THE INFORMATION ON THIS DOCUMENT IS THE PROPERTY OF BHARAT HEAVY ELECTRICALS LIMITED. IT MUST NOT BE USED DIRECTLY OR INDIRECTLY IN ANY WAY DETRIMENTAL TO THE INTEREST OF THE COMPANY.

REF. DRG. NO.

SIGN. & DATE

INVENTORY NO.

ADDITIONAL INFORMATION	TYPE OF PRODUCT OR NAME OF CUSTOMER/PROJECT
STATUS OF DRAWING	
DISTRIBUTION OF PRINTS	BHARAT HEAVY ELECTRICALS LTD. BHOPAL

	NAME	SIGN	DATE	NO. OF VAR.
DRN.	R.PARTE		22.03.14	00
CHD.	ARUN KUMAR			
APPD.	H.L.BHARANI		25.03.14	

REV.	DATE		
01	21.07.15	ALTERED	R.BARASKAR
		CHECKED	ARUN KUMAR
		APPROVED	

ZONE

1.–ADD HRC FUSE (110A)
2.–ADD THE NAME OF ROTARY SWITCH
3.–REMOVE CONTROL CIRCUIT OF TS5 & TS6

DEPT.	UNTOL. DIMS. GR.	SCALE	WEIGHT (K.G.)	REF. TO ASSY. DRG.	ITEM NO.	NO. OF ITEM
WEX						
CODE 375						

TITLE

POWER CIRCUIT DIAGRAM OF PROTECTIVE PANEL E.O.T.CRANE 5TON & 10TON SINGLE HOIST CRANE

DRAWING NO. **3WEEOT01149** REV. 01

SHT. NO. 01 NO. OF SHT. 08

SIZE A3